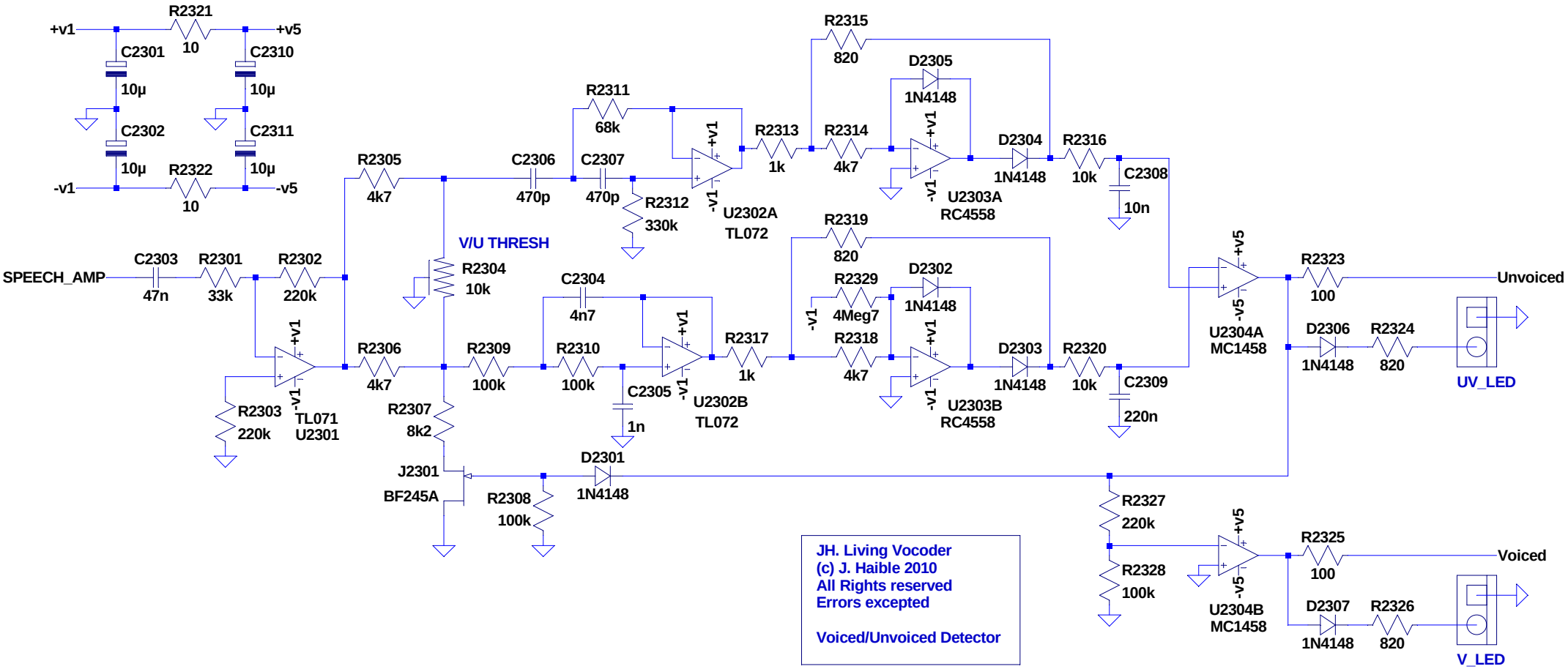
+v1
R2321
10
+v5
C2301
10µ
C2310
10µ
C2302
10µ
C2311
10µ
-v1
R2322
10
-v5
SPEECH_AMP
C2303
47n
R2301
33k
R2302
220k
R2303
220k
TL071
U2301
R2305
4k7
R2306
4k7
V/U THRESH
R2304
10k
R2307
8k2
J2301
BF245A
R2308
100k
D2301
1N4148
C2306
470p
C2307
470p
R2309
100k
R2310
100k
C2305
1n
R2311
68k
R2312
330k
C2304
4n7
U2302A
TL072
U2302B
TL072
R2313
1k
R2314
4k7
R2315
820
D2305
1N4148
U2303A
RC4558
D2304
1N4148
R2316
10k
C2308
10n
R2317
1k
R2319
820
R2329
4Meg7
D2302
1N4148
R2318
4k7
U2303B
RC4558
D2303
1N4148
R2320
10k
C2309
220n
U2304A
MC1458
R2323
100
Unvoiced
D2306
1N4148
R2324
820
UV_LED
R2327
220k
R2328
100k
U2304B
MC1458
R2325
100
Voiced
D2307
1N4148
R2326
820
V_LED
JH. Living Vocoder
(c) J. Haible 2010
All Rights reserved
Errors excepted
Voiced/Unvoiced Detector